

Ref.: 505332

# HEAVY DUTY HOSE REEL, RM-34 SERIES, 20 M, 1/2", GREASE / HYDRAULIC OIL

Very tough construction able to stand regular use and abuse in Intensive Duty applications. Fatigue resistant steel spring for years of durable performance and even load when pulling and recoiling the hose. Full port shaft and swivel for no restrictions. Spool mounted on two permanent lubricated and sealed ball bearings to reduce torque load on spring for smooth retraction and longer life. Large effective radial latching area for easier operation. Hose guide arm can be placed in different positions to accommodate any method of mounting. Narrow footprint allows accommodating more reels on the same surface. Hose reels with hose include 0,8 m inlet hose. Model with 20 m 1/2" hose for GREASE / HYDRAULIC OIL. Instruction book: 850823.

Technical data Documentation More information

| | |
|---|---|
| **Compatible fluids** | Grease, Oil |
| **Hose in diameter** | 1/2" |
| **Hose length** | 20 m (65,62 ft) |
| **Fluid Inlet** | 1/2" BSP (M) |
| **Fluid outlet** | 1/2" BSP (M) |
| **Working Pressure** | 275 bar (4000 psi) |
| **Installation options** | Floor, Wall, Ceiling, Tank |
| **Bare reel part number** | 505339 |
| **Weight** | 39 kg (86 lb) |

Technical data Documentation More information

## Instruction manuals

850823 Instruction book: Heavy duty hose reel, RM-34 series (PDF)

Download

## Catalogs

Product catalogue: REELS, 2023 EN (PDF)

Download

## Spare parts

/6203618

Download

| mm (in) | |
|---|---|
| A | 594 (23 3/8") |
| B | 248 (9 7/8") |
| C | Ø551 (21 3/4") |
| D | 560 (22 1/16") |
| E | Ø10 (3/8") |
| F | 130 (5 1/8") |
| G | 220 (8 2/3") |

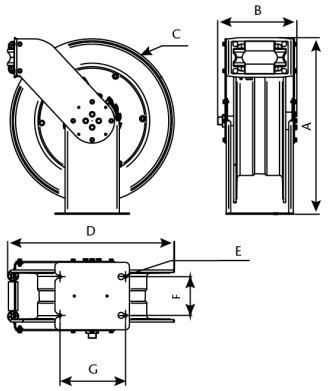


## Models

| Code | Compatible Fluids | Hose In Diameter | Hose Length | Working Pressure |
|---|---|---|---|---|
| 505332 | Grease, Oil | 1/2" | 20 m (65,62 ft) | 275 bar (4000 psi) |
| 505524 | AdBlue/DEF, Windscreen washer, Detergent | 3/4" | 15 m (49,21 ft) | 20 bar (290,08 psi) |
| 505232 | Air, Water, Coolant, Oil | 1/2" | 20 m (65,62 ft) | 160 bar (2320 psi) |
| 505224 | Air, Water, Coolant, Oil | 3/4" | 15 m (49,21 ft) | 105 bar (1520 psi) |