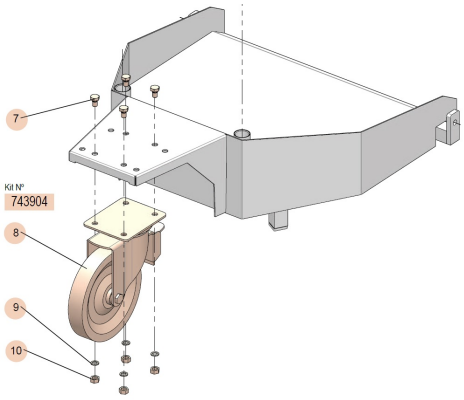

Ref.: 743904

Ø200MM WHEELS KIT WITH BRAKE

Spare part: Ø200MM WHEELS KIT WITH BRAKE

Technical data Documentation More information

Target product	432814: HEAVY DUTY DRUM TROLLEY, 185 KG DRUMS

Technical data **Documentation** More information

Catalogs

LUBRICATION SPARE PARTS GENERAL CATALOGUE 991130 (PDF)

Download