BOTTLE JACK ATG10-200

HYDRAULIC BOTTLE JACK WITH DOUBLE LIFT TELESCOPIC RAMS FOR EXTRA LONG STROKE

Item number: 0000240

- Lifting capacity 10 t
- Models with spindle extension offer optimal use of the stroke
- Fitted with practical carrying handle for easy transport



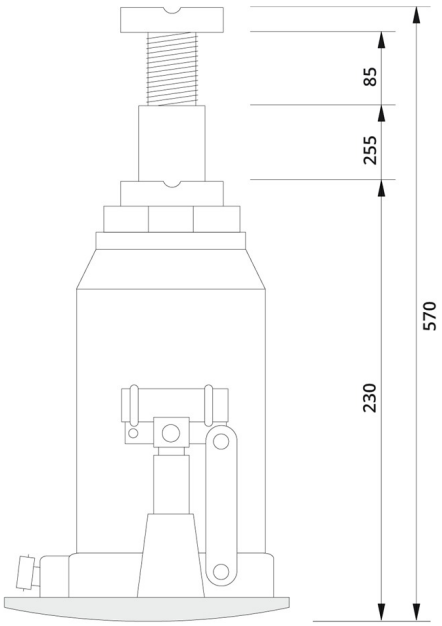

Capacity:	10 t
Min height:	200 mm
Hydraulic lift:	260 mm
Extension screw:	70mm
Max height:	570 mm
Bevelled base:	Yes