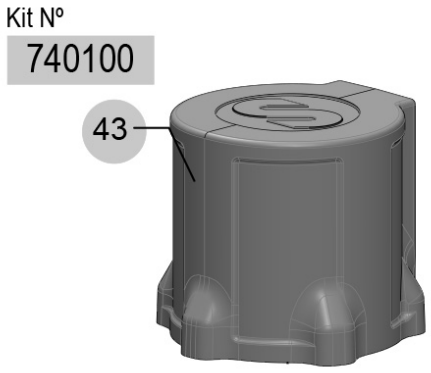

Ref.: 740100

AIR MOTOR BONNET

Spare part: AIR MOTOR BONNET

Technical data Documentation More information

Target product	404100: PNEUMATIC PISTON GREASE PUMP, PUMPMASTER 3, PM3 - 55:1, 12,5 - 20 KG (40 LB) PAILS
Target product	405100: PNEUMATIC PISTON GREASE PUMP, PUMPMASTER 3, PM3 - 55:1, 50 KG (120 LB) DRUMS
Target product	407200: PNEUMATIC PISTON GREASE PUMP, PUMPMASTER 3, PM3 - 55:1, 50 KG (120LB) DRUMS, LARGE
Target product	409200: PNEUMATIC PISTON GREASE PUMP, PUMPMASTER 3, PM3 - 55:1, 185 KG (400 LB) DRUMS

Technical data Documentation More information

Catalogs

Spare part document: LUBRICATION SPARE PARTS GENERAL CATALOGUE 2024 (PDF)

Download