NEX·U®

FLUID MANAGEMENT SYSTEM





SAMOA®

SAMOA QUALITY AND LEADERSHIP

FLUID HANDLING TECHNOLOGY

SAMOA, a privately owned company, is a leading European manufacturer of Lubrication and Fluid Handling Equipment. SAMOA products are used for transfer, dispense, metering and evacuating. SAMOA designs and manufactures a variety of products that include air operated piston and diaphragm pumps, volume flow meters, delivery guns, electronic components for inventory control systems, hose reels, hand pumps and accessories.

PRODUCT DEVELOPMENT

Product research and development is a fundamental part of SAMOA's philosophy. We are in constant contact with the market to identify new customer needs, delivering product improvements and new products.



MANUFACTURING

SAMOA's headquarters have been in Gijón, on the Spanish North Coast, for over 60 years. SAMOA's manufacturing facilities are modern and equipped with the latest state-of-the-art production equipment and technology. We are committed to design and manufacturing excellence, environmental sustainability and a healthy and safe workplace; our work processes and facilities are consequently ISO 9001, ISO 14001 and OHSAS 18001 certified.

DISTRIBUTION

Our products are available through a network of knowledgeable distributors. This global network provides a sales and consulting service that identifies the products to best meet each customer's needs, and when required offers after sales service to ensure a long and satisfactory use of our equipment.

GLOBALLY COMPETITIVE

Our continuous product improvement process ensures that our products meet customer requirements worldwide, even with the most demanding applications and environments. As a result, we are proud to say that SAMOA products are reliably working away, night and day, in more than 100 countries.



Headquarters Offices and
Technical Centre in Gijón (Spain)

You need to control your fluids

It is more than likely that your stock control for parts and consumables is well established, with charges for those items passed to customers as a matter of course.
But can you reconcile your oil purchases with oil sales and usage?
Do you know where every litre of oil is used?
Do you know how much just “disappears”?





Lost inventory equals lost profit. With today’s high oil prices, Inventory Control eliminates that concern.

Why NEX·U·®

NEX·U·® provides you with the control and the information you require to make your operation more profitable. You will be able to account for every drop of lubricant and other service fluid used.

On top of this, you will carry an efficient inventory control, with automatic alerts and fluid reordering when needed, eliminating operations downtime.

For almost any lubricant usage or operation size, with today’s high cost for these fluids, **NEX·U·®** quickly pays for itself. Once it is paid for, savings go right to the operation’s bottom line in the form of profit, profit previously lost.

NEX·U·® adapts to your way of working.



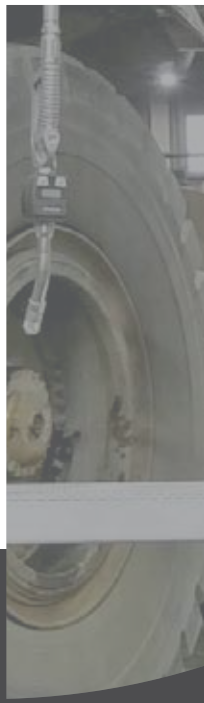

NEX·U·® is a hybrid system that brings you all the advantages of wireless flexibility and hard-wired reliability:

Wireless flexibility

- Data can be transmitted wirelessly among the different system components, eliminating long and expensive cable runs.
- Easily adds new components when required as your needs grow.
- System uses existing Wi-Fi® networks, simplifying its installation. No need for special, custom made, network components.

Hard-wired reliability

- A constant and reliable power source is always present to power the solenoid valves that control fluid delivery.
- No uncharged batteries to let you down.
- Hard-wired data transmission to avoid interferences and other obstacles which might interfere with wireless data transmission.

Product specifications are subject to change without prior notice.

inventory

NEX·U·® combines the Latin word “NEXUS”, which means connection to wireless or hard-wired connected system components, with “U” (You), the system User, the Human.

NEX·U·® has been conceived with the user in mind, making fluid management and fluid inventory control an easy and trouble free activity.

NEXUS + YOU = NEX·U·®

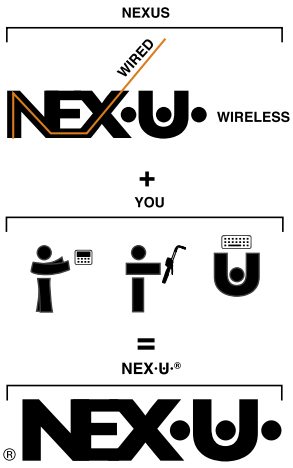

NEX·U·® contributes to increase productivity in vehicle service operations:

- Provides total control and record of every fluid dispensed.
- Secures fluid access to authorized technicians only.
- Provides accurate, real time fluid inventory information.

Main components



U·net

NEX·U·® Central Processing Unit. Controls and manages all functions and communications, wired or wireless.



U·track

NEX·U·® software. Included together with the U·net. It is the interface between the user and the system. Generates useful reports, keeps control of inventory and can communicate with multiple DMS.



U·dat

System keypad. With a full colour, touchable screen and a full QWERTY keypad provides full access to NEX·U·® and U·track.



U·vision+

Hand-held display with access keypad.



U·valve

All-in-one flow control unit. Includes pulse meter, solenoid valve, filter and electronic board for operation control and communication with other system components.



U·tank

Provides real-time inventory control and manages different alarm signals.

Product specifications are subject to change without prior notice.

U·net: NEX·U·®
System Central Processing Unit

U·net is the key NEX·U·® component. It is the central processing unit that controls the system communications and houses the U·track software.

U·net includes a powerful 2.4 GHz processor and 4 GB RAM. It controls the system functions and it manages the wired and wireless communication between the NEX·U·® components.

It has two CAN BUS ports (in/out) for wired communications with other NEX·U·® components and an ethernet port that allows U·net to connect to the LAN.
*SAMOA may deploy a dedicated network with an additional Wi-Fi® router (U·net is not a router), contact SAMOA for further information.

Unet



U·net specifications:

- Intel 2,4 GHz processor
- 4 GB RAM memory
- 64 GB storage capacity
- One Ethernet connection, one HDMI, four USB and two CAN BUS communication ports
- 110-240V AC - 5V DC transformer included.

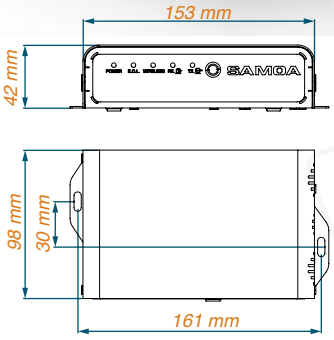

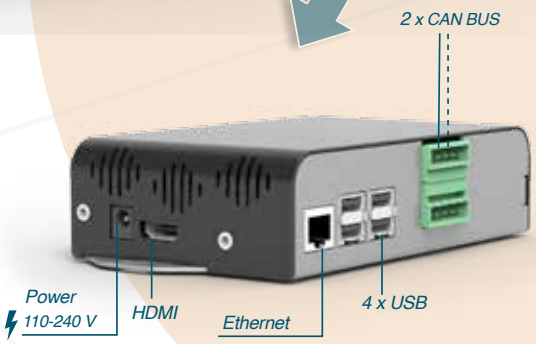

U·net also includes the U·track software.

U·track is a powerful web based software package that gives you full control of fluid usage and inventory. It is a web based software that allows multi-user applications. All PCs or tablets in the same network and in the same location can have access to U·track. U·track can work using any web browser.
Compatible with: Chrome, Firefox, Microsoft Edge.

Thanks to U·track you will be able to:

- Simple and intuitive system set-up.
- Simplified system maintenance (manage users, fluid inventory, etc.).
- Manage all the system hard-wired and wireless communication.
- Generate a wide variety of reports, which can be easily exported to CSV and txt formats.
- Record and manage Validated Preset Transactions (required for operating with U·Vision+)
- Transform any PC terminal in the workshop into a NEX·U·® virtual keypad license required.

U·track also contributes to increase your operations efficiency and profitability:

- Keeps control of every fluid drop dispensed in the system.
- Improves inventory accuracy, generating automatic warnings and email notifications for reorders at critical predefined inventory levels.
- Generates a variety of reports, to help you track dispense information such as date and time, technician, work order, fluid dispensed, volume delivered, etc.

Product specifications are subject to change without prior notice.

U·track: NEX·U·® Software

Utrack



U·track system is a web based application accessible through any device (laptop, Pc, tablet or cell phone) connected to the same network as U·net.
A virtual keypad license converts any device connected to NEX·U·® into a virtual keypad, making it an accesible for dispensing fluids.

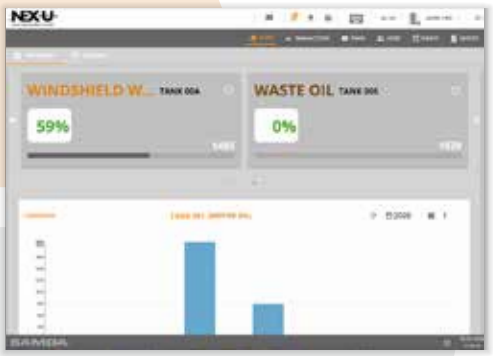

U·track dashboard screen.
In a glance, provides information on oil inventory and oil usage. Just click on any tank for more information.

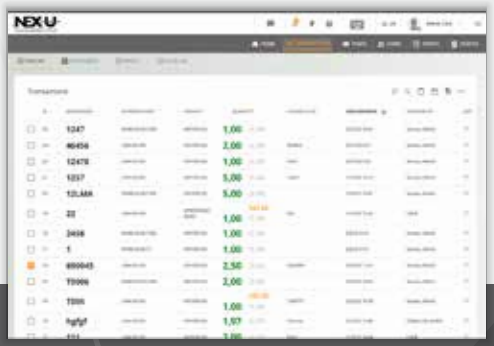

Transactions can be followed and monitored on a real-time basis if required. Thanks to U·track, each PC terminal or tablet connected to the same network used by NEX·U·® is converted into an access keypad to the NEX·U·® system (additional licenses may be required).
U·track can also generate different reports that can be exported easily into CSV format.

ORDERING INFORMATION

Part No.	Description
383 300	U·net central processing unit. Includes U·track software.
383 650	Virtual Keypad license. Converts any terminal (PC, laptop, tablet or smartphone) into a NEX·U·® access Keypad. Contact SAMOA for further information regarding the virtual keypad license.

Product specifications are subject to change without prior notice.

Dispensing mode options

Standard mode

After entering their PIN and work order number, the technician must select the type of fluid to be delivered, the hose reel number and enter the volume to deliver.



Preset mode

A previous set up must be done before validation, as figure 0 shows.

After the technician enters their PIN, work order and hose reel number, the system downloads the preset volume and the type of fluid associated to the work order entered.

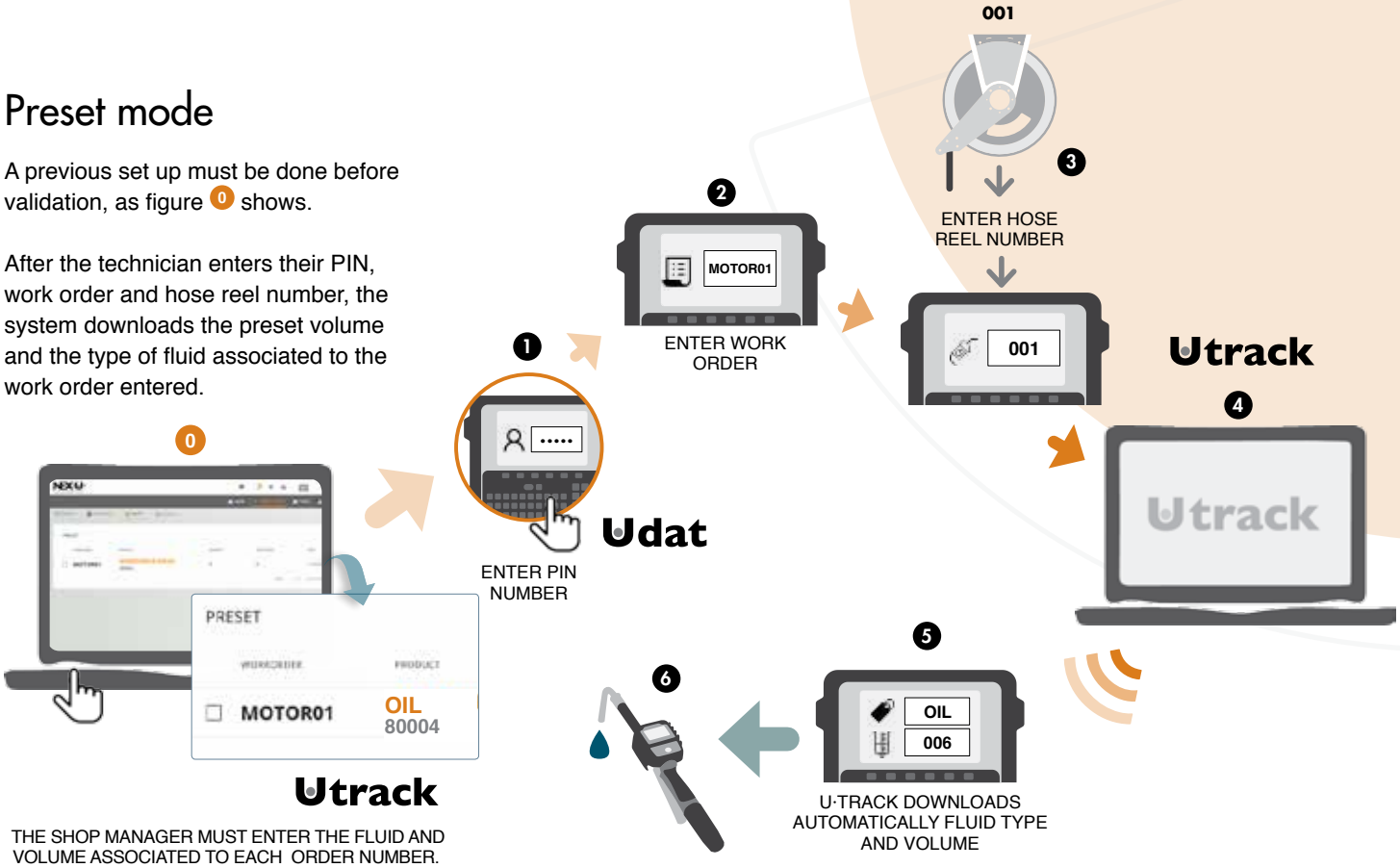

THE SHOP MANAGER MUST ENTER THE FLUID AND VOLUME ASSOCIATED TO EACH ORDER NUMBER.

Product specifications are subject to change without prior notice.

DMS - Dealer Management System Interface

NEX·U·® can interface with most popular DMS on the market, offering an efficient bidirectional communication to integrate the transaction information workshop DMS.

Features

- Easy to use: quick and effective.
- Enhanced security: work orders are checked and validated before fluid is dispensed.
- Automation: simplifies data entering as it can be automatically downloaded from the DMS.

Contact your SAMOA Distributor who will assist you with the license software you need.

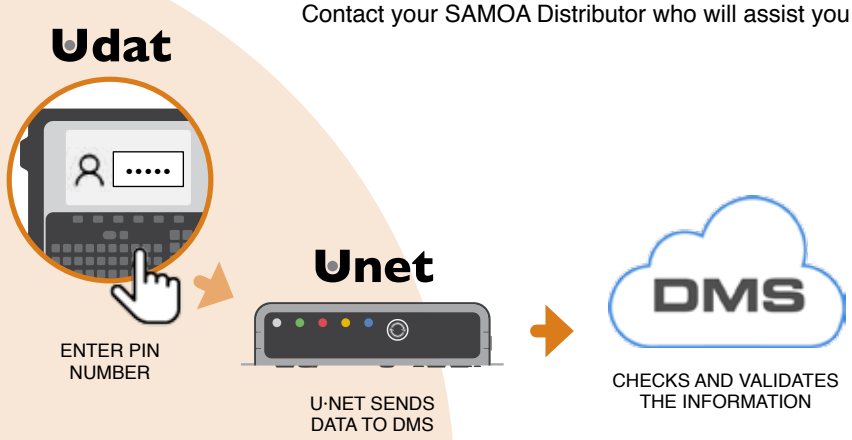

SAMOA Interface

A bidirectional communication is established through webservice. The user enters their PIN number and the work order. DMS will prompt a message whether this information exists or not.
NEX·U· offers multiple operating modes depending on the customer needs.

Bi-directional integration with DMS used by most brands

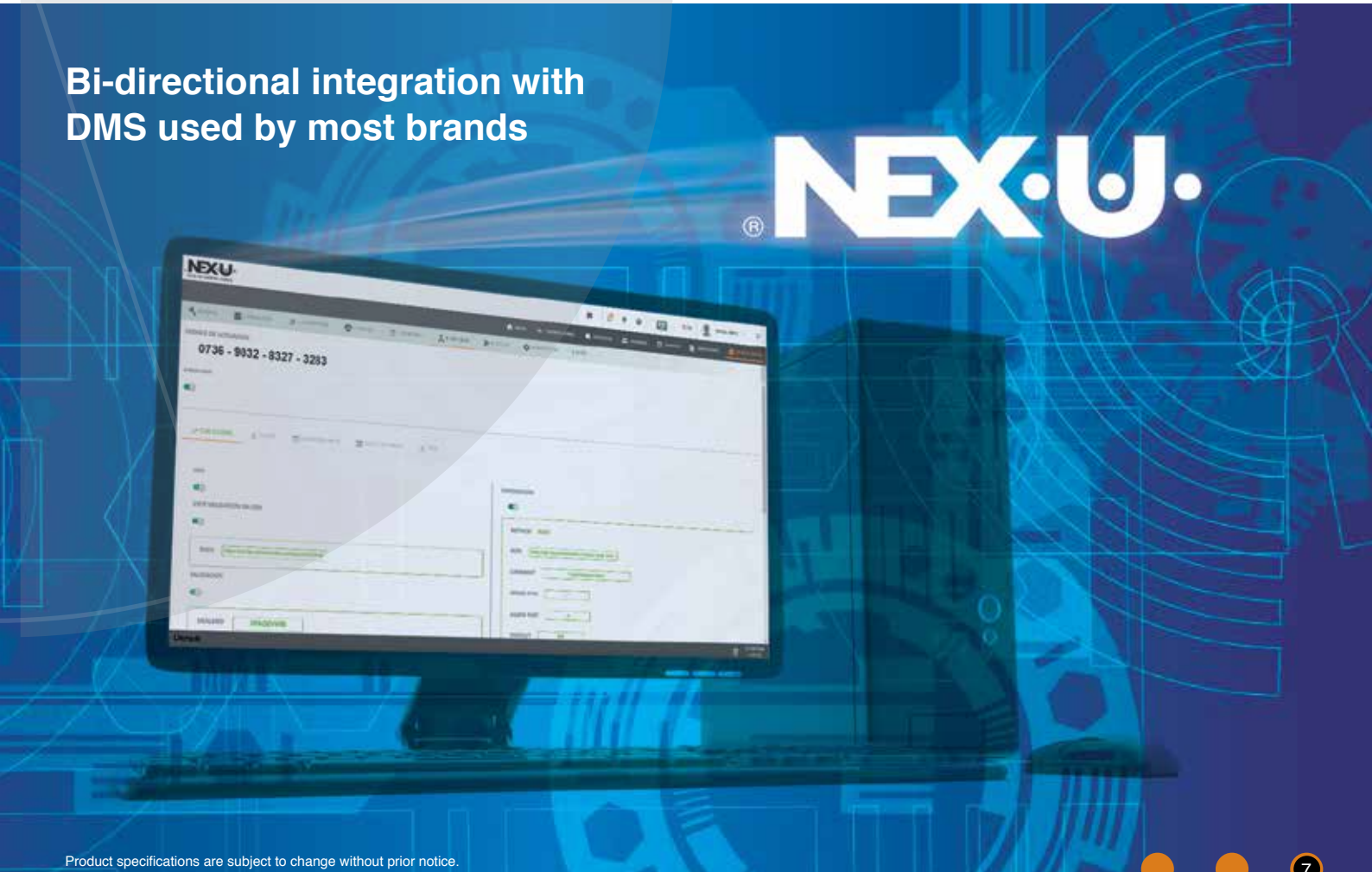

Product specifications are subject to change without prior notice.

System access: Multiple Possibilities

NEX·U·® adapts to the way you work and it offers multiple possibilities for accessing the system.

Technicians can access NEX·U·® via:
- U·dat: System access keypad.
- U·vision+.
- Any device connected to the same network as U·net (laptop, smartphone or tablet).

Udat
Udat power+

U·dat: Access Keypad

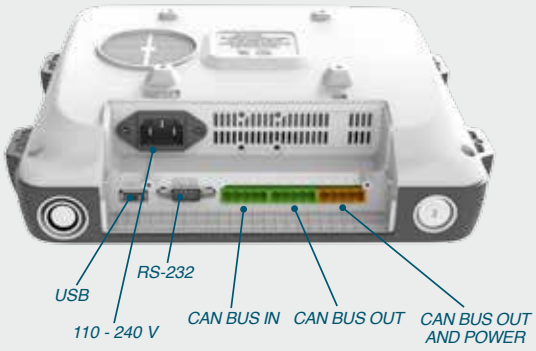



System Access Keypad. U·dat allows system access to technicians either through a PIN code or using a RFID card.

- U·dat includes a 7" full colour graphics display and a complete QWERTY keypad.
- U·dat supports CAN BUS cable communications that transmits data and power to open the solenoid valves in the system. "Plug-and-play" connectors make cabling easy.
- U·dat includes the transformer required to simultaneously open up to 8 solenoid valves.
- U·dat requires 110 - 240 V power supply.
- Optional Bluetooth printer (see accessories).

U·dat connection panel.

All wired connections can be quickly and easily done without opening the U·dat. It is possible to connect a printer, an external RFID reader or a barcode reader to the RS-232 port.

U·dat:
- 110 - 240 V AC
- CAN BUS in/out

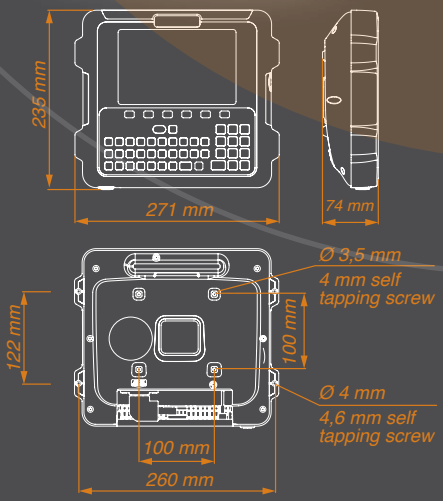

ORDERING INFORMATION

Part No.	Description
383 000	**U·dat power+ keypad** NEX·U·® access keypad with 7" colour screen and QWERTY keypad. One USB, one RS232 and in/out CAN BUS ports. 110 - 240 V AC, with a 320 W transformer to open 8 solenoid valves, supports CAN BUS communications.
383 020	**U·dat keypad** Same as above, but with a 75 W transformer to open 2 solenoid valves.

Product specifications are subject to change without prior notice.



U·vision+: Hand-held display and keypad module

U·vision+ includes a six-button keypad and it can replace the U·dat keypad for data entry in the system as it allows the following operations:

- User access through PIN entry.
- Scroll through existing open job orders to select the one corresponding to each operation or enter the job order number (digits only).
- Enter the volume of fluid to be dispensed.
- Confirm fluid type and transaction.

U·vision+ has a backlight display connected using Bluetooth® with a U·valve, U·meter+ or U·count and it displays the following parameters:

U·vision+ is powered with 4 "AA" 1.5 V alkaline batteries.

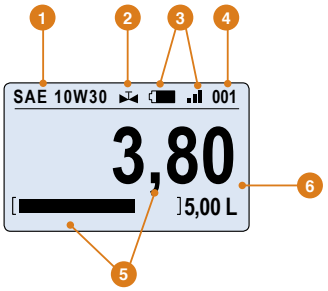

1 Fluid dispensed type.
2 Solenoid valve open or closed.
3 Battery life and Bluetooth® signal.
4 Hose reel / fluid outlet number.
5 Volume delivered and operation progress.
6 Preset volume.

Two possible dispensing modes: Standard and Preset



Enter button

Four scroll / navigation buttons



Enter technician PIN number

STANDARD MODE



Enter / select job order number



Enter volume to deliver

PRESET MODE



Select transaction

U·vision+ adapts to any SAMOA oil control handle and transforms the handle into a hand-held display and keypad for access to the NEX·U·® system.

ORDERING INFORMATION

Part No.	Description
383 401	U·vision+ hand-held keypad and display module. (Oil gun not included).

Product specifications are subject to change without prior notice.

Volume Meters

NEX·U·® obtains dispensed volume information from oval gear meters. These meters transmit a pulse per each fraction of volume that goes through them. **NEX·U·®** recognizes and processes these pulses to shut down the corresponding solenoid valve, once the preset volume is reached and to maintain inventory control and pump operation.

Pulse meters are placed in the dispense line, so they are not subject to accidental damage and cannot be by-passed or tampered with. They effectively count every fluid drop.

There are different meter models to meet the needs of each application.



Component	Pulse meter	Solenoid valve	Communication module	Bluetooth®	Wi-Fi®	Materials and Inlet / outlet ports available
U·valve	Yes	Yes	Yes	Yes	-	Aluminium 1/2"
U·valve+	Yes	Yes	Yes	Yes	Yes	
U·meter	Yes	-	Yes	-	-	Aluminium 1/2" and 3/4"
U·meter+	Yes	-	Yes	Yes	-	
U·pulser	Yes	-	-	-	-	PVC & SS 1/2"
U·count	-	-	Yes	Yes	-	N/A

Product specifications are subject to change without prior notice.

U·valve

U·valve is a compact unit combining a high accuracy pulse meter, a solenoid valve and a large cleanable fluid screen filter with an electronic module. This module is required to control the meter and valve operation and to communicate with other system components.

- Reduces installation time and eliminates the risk of leaks when using separate components.
- It has a large, high visibility LED display which shows the U·valve number assigned in the system and the U·valve operation.
- Four coloured LED lights that show the U·valve operation for diagnosis and two buttons for system configuration.
- U·valve supports CAN BUS cable communication that transmits data and the electric power required to open the solenoid valve and Bluetooth® connection to a U·vision or a U·vision+ fluid handle with display.
- U·valve+ includes Wi-Fi® communications for data transmission to other system components. (Requires U·power or U·power+ power supply units).
- U·valve and U·valve+ require 24 V DC supplied by a U·dat or a U·power module.



U·valve
U·valve+

Product specifications	
Wetted parts	Aluminium, NBR, stainless steel, acetal
Applications	Lubricants, antifreeze solutions * if fluid additives are used, it is recommended to install stainless steel pulse meter and stainless steel solenoid valve
Connection threads	1/2" BSP (F)
Flow range	1 - 30 l/min
Pulses per litre	328 ppl
Accuracy	+/- 0,5 %
Maximum working pressure	100 bar
Solenoid valve	24 V DC
Communication	CAN BUS, Bluetooth®, Wi-Fi® (U·valve+ only)



U·valve and U·valve+ wired connections use fast connection in/out CAN BUS terminals.

U·valve cable connectors are not included (see accessories).

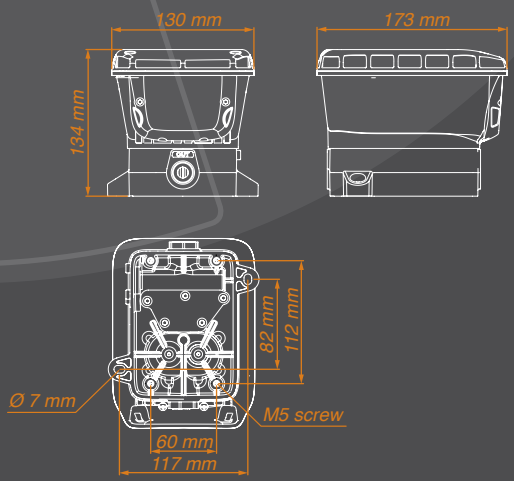

ORDERING INFORMATION

Part No.	Description
383 501	U·valve meter, solenoid valve and electronic module. Includes Bluetooth® communication for connecting to a U·vision or U·vision+.
383 500	U·valve+ meter, solenoid valve and electronic module. Includes Bluetooth® connection to a U·vision or U·vision+ and Wi-Fi® for data transmission to other components in the system.

Product specifications are subject to change without prior notice.

U·meter

High accuracy, compact pulse meter including the electronic module required to control the meter and valve operation and to communicate with other system components through CAN BUS.

- The meter has an LED display showing the U·meter number assigned in the system, four coloured LED lights that show the U·meter operation for diagnosis and two buttons for system configuration.
- Equipped with fast connection in/out CAN BUS terminals.
- Available in different materials and sizes to match different applications.

U·meter+ includes Bluetooth® connection to a U·vision or a U·vision+ module.



383 514

383 520

U·meter+ includes Bluetooth® for connecting to a U·vision or U·vision+.

Umeter
Umeter+

U·meter Part No.	381 513	383 525	383 522	383 520
Wetted parts	Aluminium, NBR, stainless steel, acetal	Aluminium, NBR, stainless steel, acetal	PVC, Vectra®, stainless steel, Viton®	Stainless steel, Vectra®, Viton®
Applications	Lubricants	Lubricants, diesel	DEF/AdBlue®, windshield wash and antifreeze solutions	DEF/AdBlue®, windshield wash and antifreeze solutions
Connection threads	1/2" BSP (F)	3/4" BSP (F)	1/2" BSP (F)	1/2" BSP (F)
Flow range	1 - 30 l/min	8 - 80 l/min	1 - 50 l/min	1 - 50 l/min
Pulses per litre	328 ppl	109 ppl	320 ppl	320 ppl
Accuracy	+/- 0,5 %	+/- 0,5 %	+/- 0,5%	+/- 0,5%
Maximum working pressure	100 bar	100 bar	30 bar	100 bar
Communications	CAN BUS	CAN BUS	CAN BUS	CAN BUS
U·meter+, models with Bluetooth® Part No.	**383 514**	**383 526**	**383 523**	**383 521**

Only for connection with U·dat, U·valve, or an adjacent U·meter. Requires a 24 V DC solenoid valve.

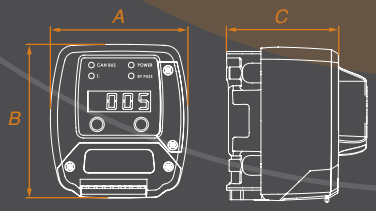

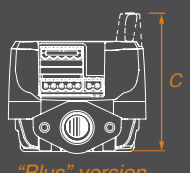

"Plus" version

	381 513	383 514	383 525	383 526	383 522	383 523	383 520	383 521
A (mm)	86	86	86	86	86	86	86	86
B (mm)	96	96	96	96	96	96	96	96
C (mm)	70	86	101	117	73	86	70	86

Product specifications are subject to change without prior notice.

U·count
U·pulser

Ucount



U·count Fluid control module includes a high visibility LED display and the software required to function with the rest of the NEX·U·® system components.
The LED display shows the number assigned in the system and four colour LED lights show the operation of the valve for diagnosis and two buttons for system configuration.
U·count supports CAN BUS hard-wired communication that transmits data and power required to open the solenoid valve, for data communication with other system components and Bluetooth® to communicate with a U·Vision or U·Vision+ handle.

U·count dimensions:

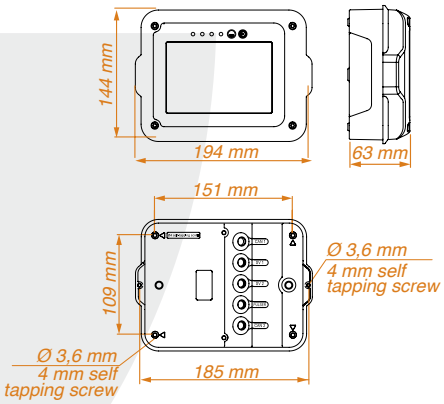

Upulser



U·pulser high accuracy in-line pulse meter. Equipped with connection terminal and valve open indication light. Only for connection to a U·count module. This meter does not have a display or function buttons and requires a 24 V DC solenoid valve.

ORDERING INFORMATION

U·count	383 750				
Description	Fluid meter and solenoid valve controller includes Bluetooth®, CAN BUS communications.				
U·pulser meter	**366 050**	**366 057**	**366 053**	**366 055**	**366 059**
Wetted parts	Aluminium, NBR, stainless steel, acetal	Aluminium, NBR, stainless steel, acetal	PVC, Vectra®, stainless steel, Viton®	Stainless steel, Vectra®, Viton®	Aluminium, acetal, NBR, Stainless steel
Applications	Lubricants, antifreeze solutions	Oil, glycol, coolant solutions, diesel	DEF / AdBlue®, windshield wash and antifreeze solutions	DEF / AdBlue®, windshield wash and antifreeze solutions	Oil, glycol, antifreeze solutions, diesel
Connection threads	1/2" BSP (FF)	3/4" BSP (FF)	1/2" BSP (FF)	1/2" BSP (FF)	1" BSP (FF)
Flow range	1 - 30 l/min	8 - 80 l/min	1 - 50 l/min	1 - 50 l/min	10 - 80 l/min
Pulses per litre	328	110	320	320	110
Accuracy	+/- 0,5 %	+/- 0,5 %	+/- 0,5 %	+/- 0,5 %	+/- 0,1 %
Maximum working pressure	100 bar	100 bar	30 bar	100 bar	100 bar

Product specifications are subject to change without prior notice.

NEX·U·® Compact

NEX·U·® also offers solutions to smaller workshops where web based software is not needed. NEX·U·® COMPACT is a simple system based in a special U·dat keypad that is able to control a maximum of 8 dispensing points.

The Keypad includes a 7" colour screen and a simplified version of the U·track software. The software included provides workshops with:

- Full control of bulk stored fluid usage.
- Inventory control using declining balance method. NEX·U·® COMPACT will give a warning signal once a certain inventory is reached, and restricts access to those outlets that have run out of inventory.
- Ability to generate full reports in CSV format that can provide useful management information.

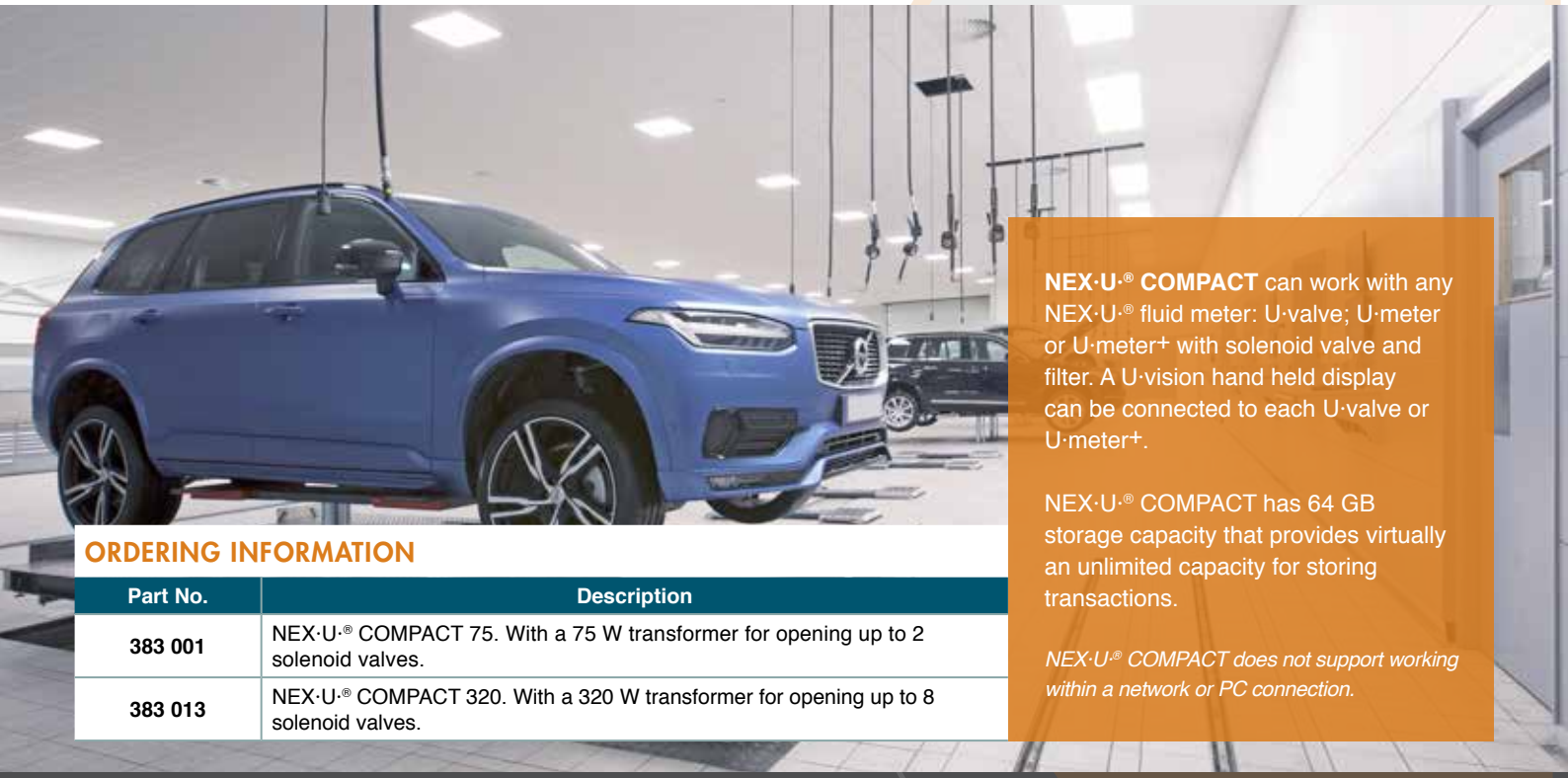

NEX·U·® COMPACT can work with any NEX·U·® fluid meter: U·valve; U·meter or U·meter+ with solenoid valve and filter. A U·vision hand held display can be connected to each U·valve or U·meter+.

NEX·U·® COMPACT has 64 GB storage capacity that provides virtually an unlimited capacity for storing transactions.

NEX·U·® COMPACT does not support working within a network or PC connection.

ORDERING INFORMATION

Part No.	Description
383 001	NEX·U·® COMPACT 75. With a 75 W transformer for opening up to 2 solenoid valves.
383 013	NEX·U·® COMPACT 320. With a 320 W transformer for opening up to 8 solenoid valves.

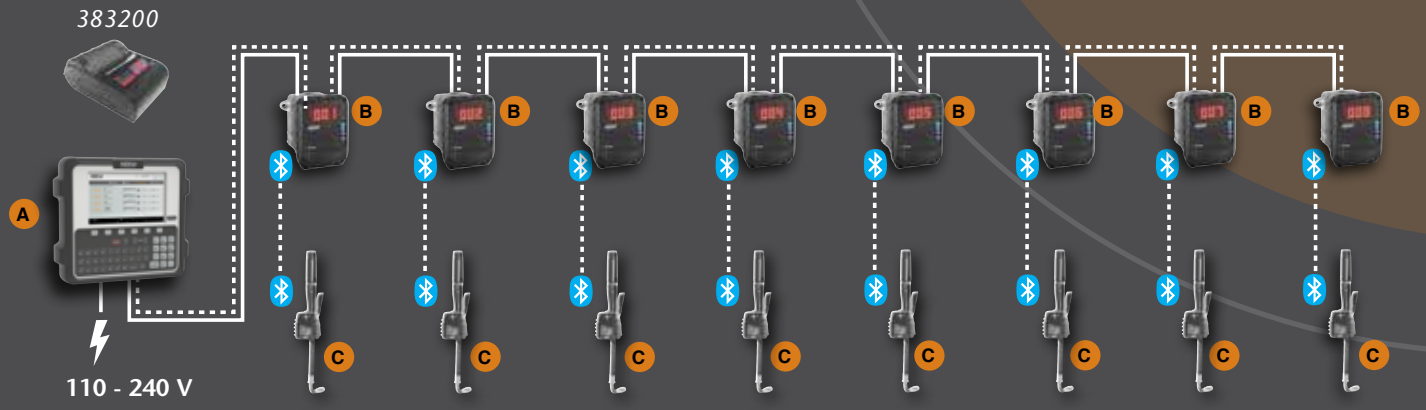

NEX·U·® COMPACT keypad A can control 8 dispensing points (model with 320 W transformer) or 2 dispense point (model with 75 W transformer).
Each dispensing point B can include a U·valve, a U·meter or U·meter+ with solenoid valve combination.
A U·vision hand held display C can be connected to each fluid outlet using Bluetooth® communications.
It is possible to include a Bluetooth printer to provide a ticket for the transactions.

Configuration has to be done through a pc.

Product specifications are subject to change without prior notice.

NEX·U·® Mobile

Fluids in service trucks require similar controls to those in any service centre.

NEX·U·® MOBILE allows fluid inventory and usage control in mobile service trucks.

A special U·dat keypad module, which includes the software required for an autonomous operation, can control up to a maximum of 8 fluid outlets. Completed transactions can be saved to a USB memory stick in an Excel format.



NEX·U·® MOBILE can work with any NEX·U·® fluid meter: U·valve; U·meter or U·meter+ with 24V DC solenoid valve and filter.

Standard U·count and U·pulser solenoid valve are compatible with NEX·U·® MOBILE as long as they are connected to a 24 V DC solenoid valve.

ORDERING INFORMATION

Part No.	Description
383 012	NEX·U·® MOBILE keypad.

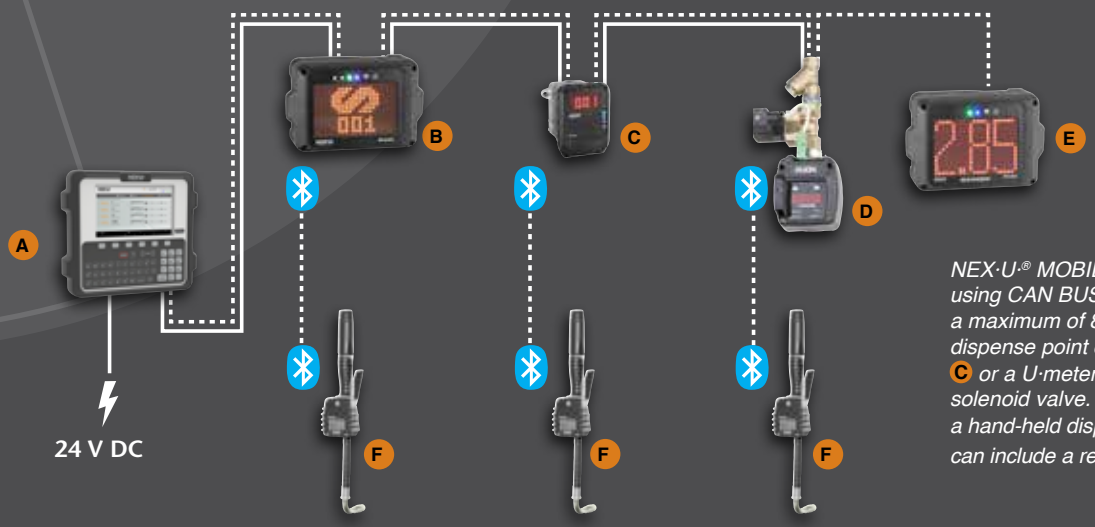

NEX·U·® MOBILE keypad A, connects using CAN BUS cable (power and data) to a maximum of 8 dispensing points. Each dispense point can have a U·count B, U·valve C or a U·meter+ or U·meter D with a 24 V DC solenoid valve. Each dispense point can have a hand-held display U·vision F and the system can include a remote display U·view E.

Product specifications are subject to change without prior notice.

NEX·U·® Remote Displays

Uvision

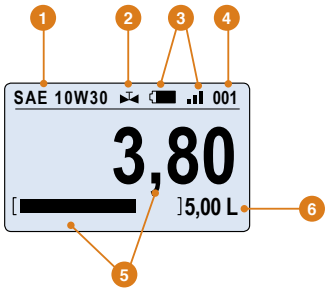

1 Fluid dispensed type.
2 Solenoid valve open or closed.
3 Battery life and Bluetooth® signal.
4 Hose reel / fluid outlet number.
5 Volume delivered and operation progress.
6 Preset Volume.

U·vision

Hand-held display module to fit a SAMOA oil control handle. Includes a backlight display connected via Bluetooth® with a U·valve, U·meter+ or U·count module and it displays the following parameters:

- Hose reel (fluid outlet number and fluid dispensed type).
- Battery life and Bluetooth® signal strength.
- Volume delivered and operation progress.
- Solenoid valve open or closed.



ORDERING INFORMATION

Part No.	Description
383 400	U·vision hand-held display module. (Oil gun not included).

Uview



U·view

Remote, high visibility, LED display that shows the volume delivered through various U·valves (no simultaneous operation supported). U·view supports Wi-Fi® and hard-wired communication.
U·view requires hard-wired connection (data and power) to a U·dat keypad or to a 110 - 240 V AC power supply using a 24 V DC external transformer (U·power or U·power+).

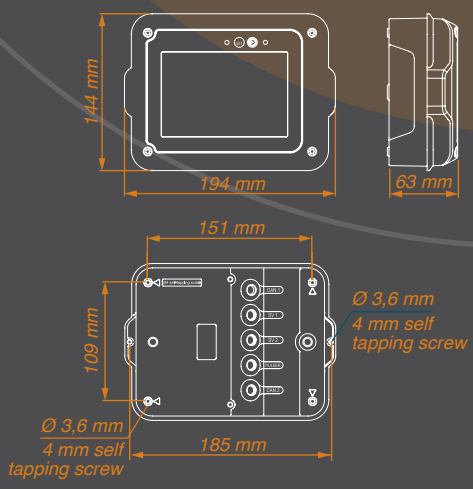

ORDERING INFORMATION

Part No.	Description
383 700	U·view remote display module.

Product specifications are subject to change without prior notice.

Tank Level Monitor Module

Provides real-time inventory control, reducing concerns about running out of inventory or used fluid tanks overflow.

Utank



The number of input and output ports are:

- One analogical input per tank for a pressure probe with 4-20 mA or 0-10V.
- Three digital inputs per tank for a low, intermediate or high-level probe [1].
- One output per tank for a solenoid valve to control air supply to each pump.

- One output per tank for an electro-pneumatic valve to prevent tank overfill.
- One output for controlling an air solenoid valve to stop the air supply to all pumps when the workshop is closed.
- One output per tank for controlling a flash warning light or an acoustic alarm.

U·tank supports CAN BUS wired communication with other NEX·U·® system components. It requires a 110 -240 V AC supply.

[1] *The use of digital probes does not allow real-time inventory monitoring. NEX·U·® will use declining balance for inventory control and will require manual inventory adjustment when fluid is supplied to the tank.*

It is a monitor module capable of controlling two tanks using digital or analogical level gauges. Can be connected to solenoid valves to control pump operation, and to external warning devices.

U·tank has two independent graphic displays and level bars. Each of them shows the inventory available in each tank. It also has a set-up keypad for inventory adjustment if required.[1]

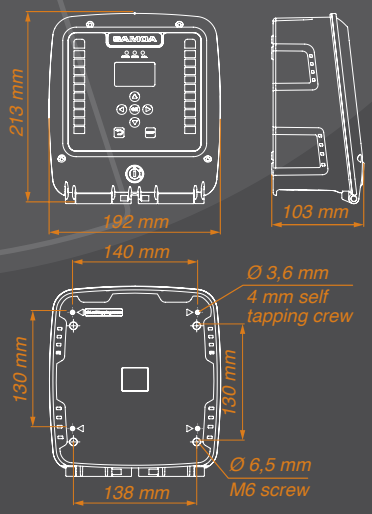

ORDERING INFORMATION

Part No.	Description
383 100	U·tank tank monitoring module. Can control up to two tanks. Supports CAN BUS communications. 110 - 240 V

Product specifications are subject to change without prior notice.

NEX·U·® Accessories

U·meter and solenoid valve kits

Umeter

U·meter and solenoid valve kits include a high precision U·meter or U·meter+ meter, a solenoid valve and a Y-strainer.



Part No	Application	Pulse meter	Solenoid valve	Y-strainer
383 550	Lubricants, antifreeze solutions	U·meter 381 513	389 001	950 372
383 551	Lubricants, antifreeze solutions	U·meter+ 383 514	389 001	950 372
383 552	High delivery lubricants, antifreeze solutions	U·meter 383 525	389 002	950 373
383 553	High delivery lubricants, antifreeze solutions	U·meter+ 383 526	389 002	950 373
383 554	Diesel fuel	U·meter 383 525	389 002	950 374
383 556	DEF / AdBlue®, windshield wash (low pressure)	U·meter 383 522	389 004	950 372
383 557	DEF / AdBlue®, windshield wash (low pressure)	U·meter+ 383 523	389 004	950 372

SOLENOID VALVES

NEX·U·® requires 24 V DC, normally closed solenoid valves to operate. U·valve and U·valve+ include a solenoid valve. For other metering elements, a solenoid valve compatible with the fluid and the application requirements must be used.



389 001



389 002



389 021

Part No.	Application and wetted materials	Connection threads	Voltage	Type	Max. Working pressure
SOLENOID VALVES FOR FLUIDS					
389 001 (1)	Oil and antifreeze solutions. Brass and NBR	1/2" BSP (F)	24 V DC	N.C.	50 bar
389 002	Coolant, diesel, water,oil. Brass and NBR	3/4" BSP (F)	24 V DC	N.C.	50 bar
389 004	DEF / AdBlue®; antifreeze and windshield wash solutions, stainless steel and EPDM	1/2" BSP (F)	24 V DC	N.C.	10 bar
389 021	Electro-pneumatic valve. Prevents over fill of waste fluid tanks. Brass and NBR	1-1/2" BSP (FF) for fluids 1/4" BSP (FF) for air	24 V DC and 1-4 bar compressed air	N.O.	10 bar
SOLENOID VALVES FOR COMPRESSED AIR – PUMP CONTROL					
389 013	Compressed air. Brass and NBR	1/2" (F)	24V AC	N.C.	10 bar
389 019	Compressed air. Brass and NBR	1/4" (F)	24 V DC	N.O.	10 bar
389 016	Compressed air. Brass and NBR	3/8" (F)	24 V DC	N.C.	10 bar

N.C.= Normally closed.
N.O.= Normally open.
(1) for use in standard delivery applications, with a 1/2" U·meter.

Product specifications are subject to change without prior notice.

Upower+
Upower



383 152

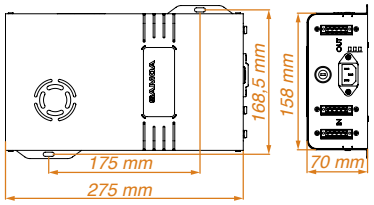



383 150 - 383 151

Power supply to solenoid valves and other system components. U·power connects using CAN BUS cable to a U·valve, U·valve+, U·meter, U·meter+, U·count or U·view whenever the power supplied by a U·dat keypad is not present.

Part No.	Description
383 150	U·power+. Power supply unit with a 320 W transformer for use with 8 solenoid valves with 2 CAN BUS connectors.
383 151	U·power. Power supply unit with a 75 W transformer for use with 2 solenoid valves.
383 152	U·power+. Power supply unit with a 320 W transformer for use with 8 solenoid valves with 3 CAN BUS connectors (1 IN and 2 OUT).

Uconnect

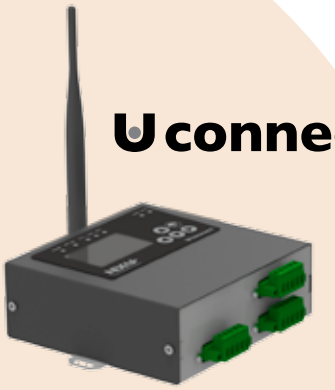

383 210

CAN BUS TO WIFI CONVERTER

Part No.	Description
383 210	U·connect allows wireless communication among the different components of the system. Equipped with an external antenna, it allows for extended signal coverage. It can be configured from a Windows or Android application.



383 200

BLUETOOTH PRINTER

Part No.	Description
383 200	Optional printer for use with NEX·U·® COMPACT, connected via Bluetooth to the U·dat.



381 901

BAR CODE READER

Part No.	Description
381 901	Bar code laser reader. Reads any one dimensional code. For use with a U·dat, U·dat Power+ and U·dat for NEX·U·® MOBILE and COMPACT systems.



383 911

U·valve BRACKETS

Part No.	Description
383 911	Allow fixing U·valve on top of a hose reel stand (360 160).



383 915

KEYPAD BRACKETS

Part No.	Description
383 915	Universal VESA bracket.

Product specifications are subject to change without prior notice.

NEX·U·® Accessories

CABLE

3082A 15/18AWG communication and power CAN BUS cable.

Part No.	Description
381 950	CAN BUS communication cable.



381 950

Part No.	Description
381 957	Jumper cable. 0,5 m cable with prewired connectors 381 908 for connecting adjacent elements with a CAN BUS cable.

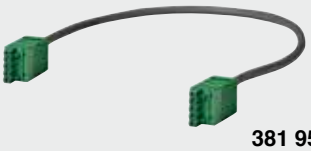

381 957

Part No.	Description
381 908	In/out electrical connectors. For use with U·meter, U·meter+.

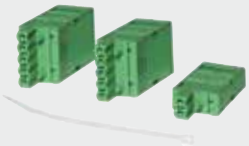

381 908

U·valve CONNECTORS:

Part No.	Description
383 913	Allows wiring connection between U·valves.



383 913

TANK MONITORING ACCESSORIES

Part No.	Description
382 120	Tank level pressure gauge. Allows real-time monitoring of the volume in a tank. Maximum tank depth 350 cm.



382 120

Part No.	Description
382 201	Digital level gauge. Detects minimum, intermediate or maximum volume in a tank. Does not allow real-time monitoring. Adjustable height, includes 5 m cable.



382 201

Part No.	Description
382 005	Remote flash and acoustic alarm.



382 005

Product specifications are subject to change without prior notice

Product specifications are subject to change without prior notice.

Creating a Wireless Network

There are two ways to create a wireless network:

- Using an existing Wi-Fi ® network. Requires access to existing wireless network credentials.
- Creating a dedicated Wi-Fi® network. New wireless credentials are created for this network.

In both cases IP addresses, network and default gateway, are required. The key component is U·net.

USING AN EXISTING NETWORK

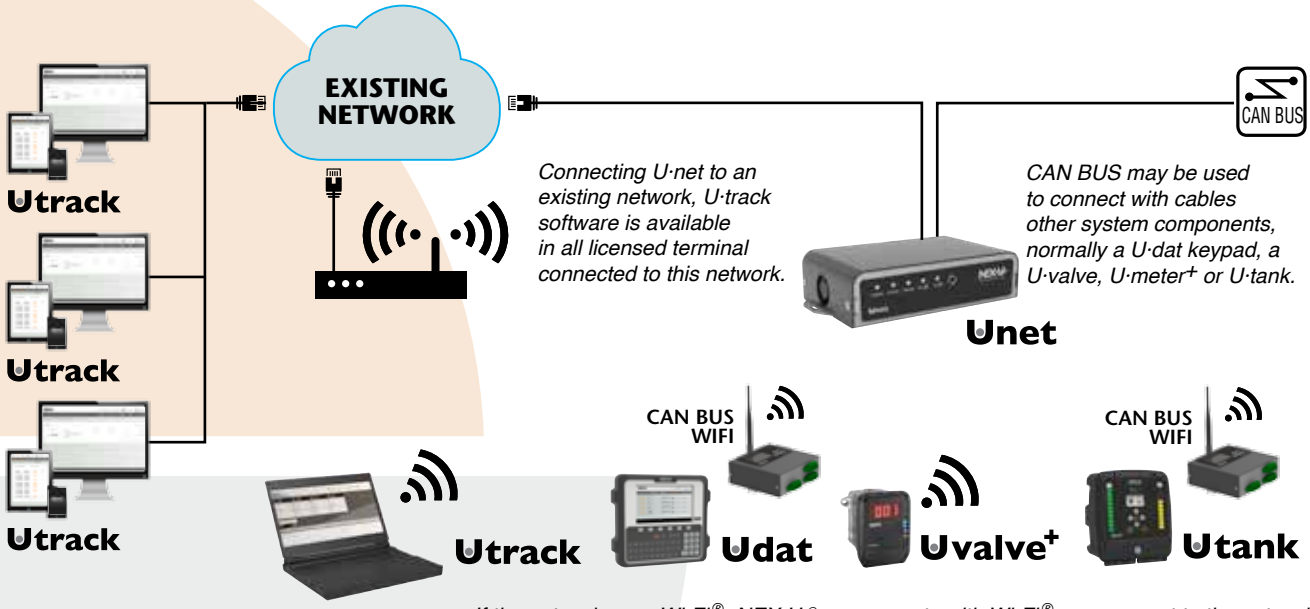

If the network uses Wi-Fi®, NEX·U·® components with Wi-Fi® can connect to the network via Wi-Fi®. Additionally, other licensed terminals (laptops, tablets, Smartphones) can have access to U·track.

CREATING A NEW NETWORK

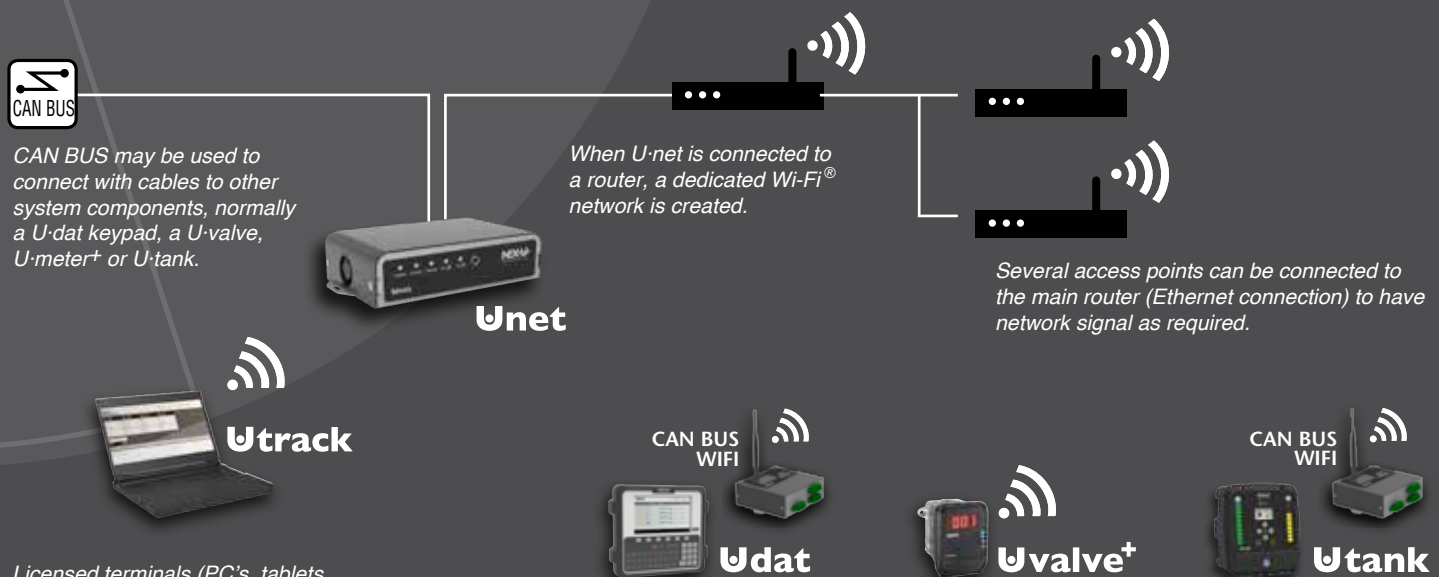

Licensed terminals (PC's, tablets, Smartphones) can connect to the NEX·U·® network and have access to the NEX·U·® system through U·track.

NEX·U·® components can connect to the NEX·U·® wireless network for data communication among them.

Product specifications are subject to change without prior notice.

INSTALLATION EXAMPLES

NEX·U·® provides maximum flexibility in the way the user interacts with the system, the most effective connection method and enhanced reporting capability.

ACCESS THROUGH U·dat

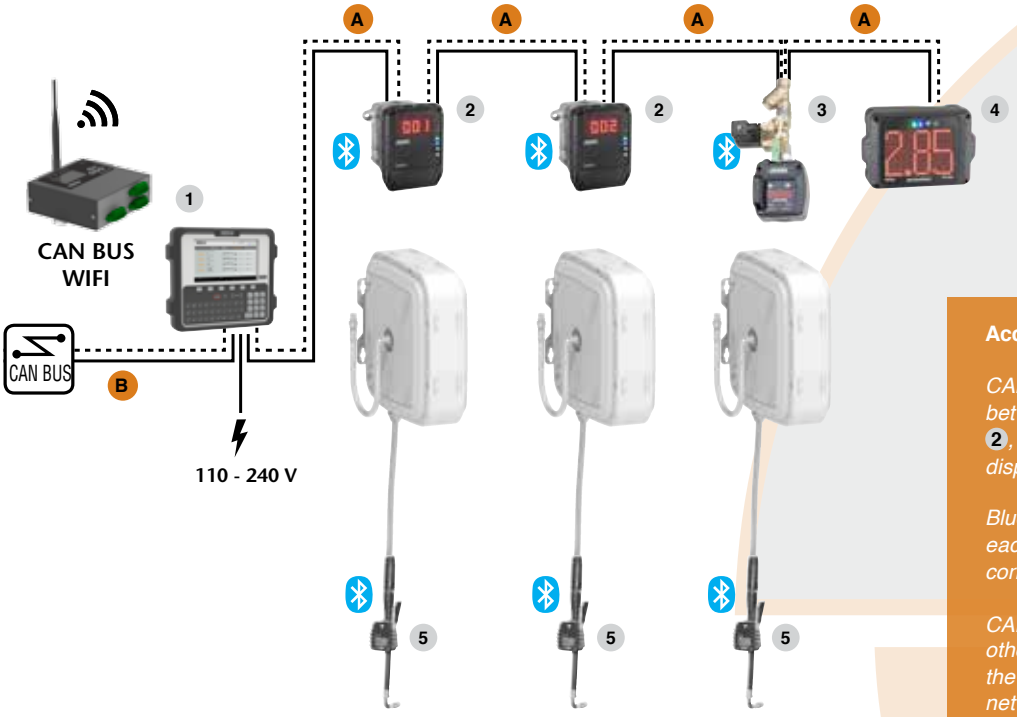

Access through U·dat

CAN BUS cable A, transmits power and data between the U·dat keypad 1, the U·valves 2, the U·meter+ 3 and the U·view remote display 4.

Bluetooth® connection is used to communicate each U·valve 2 and U·meter+ 3 with its corresponding U·vision 5 hand-held display.

CAN BUS cable B communicates with other NEX·U·® components. Alternatively, if the keypad 1, is connected to the wireless network, data can be transmitted wirelessly to other NEX·U·® components.

ACCESS THROUGH U·vision+

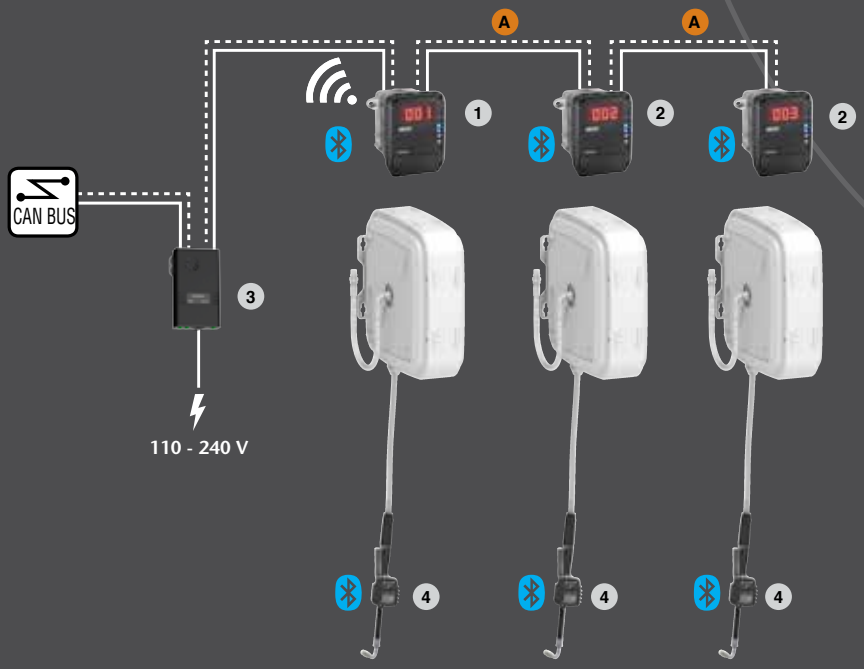

Access through U·vision+

Power and data are transmited using CAN BUS cable A between the U·valve+ 1 and the other U·valves 2. Power to energize the solenoid valves is supplied by the U·power 3, connected to U·valve+ 1.

Each U·valve+ 1 and U·valve 2 is connected to its corresponding U·vision+ 4, hand-held display and systems access Keypad.

Wireless data transmission is done by U·valve+ 1.

Product specifications are subject to change without prior notice.

PC - LAPTOP CONNECTION

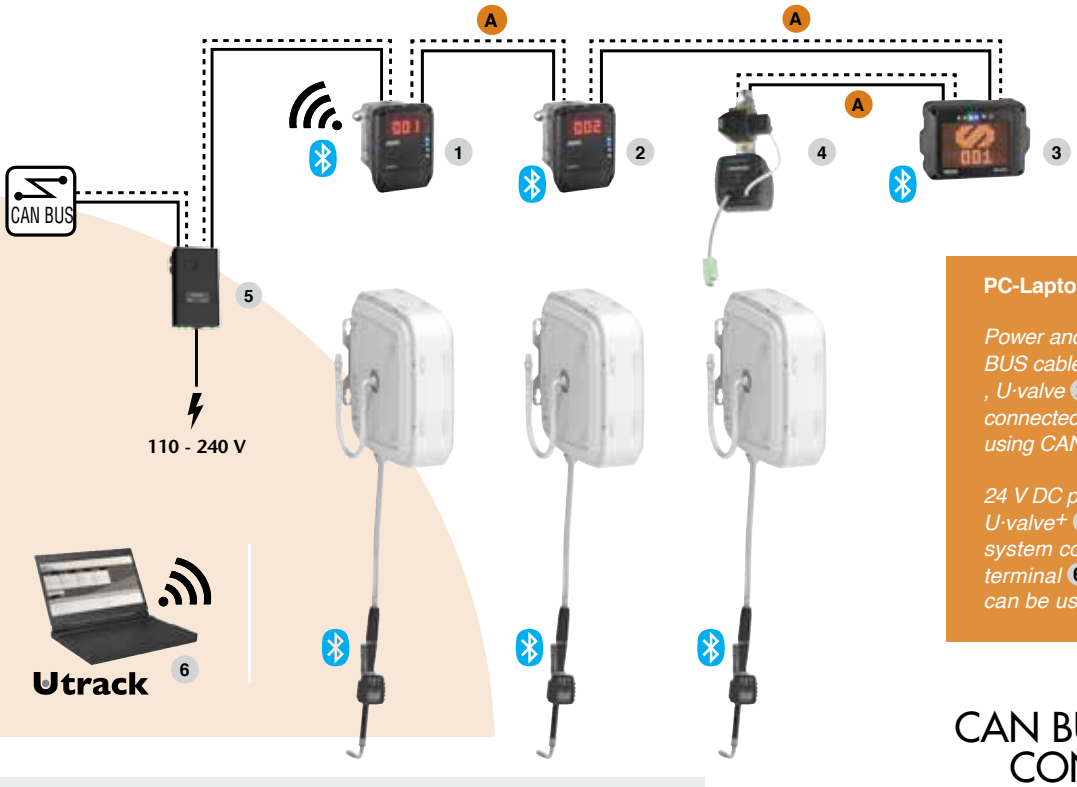

PC-Laptop connection

Power and data are transmitted using CAN BUS cable A between the U·valve+ 1 , U·valve 2 and U·count 3. U·count 3 is connected to U·pulser solenoid valve 4 also using CAN BUS connection.

24 V DC power is supplied by U·power 5 to U·valve+ 1 connecting using Wi-Fi® with all system components, including any licensed terminal 6 that is connected to U·track and can be used as a virtual access keypad.

CAN BUS FAST CONNECTION



U·dat, U·valve, U·meter, U·count, U·tank and U·net use in/out CAN BUS fast connectors that make cabling easier, quicker and prevent disconnections.

TANK MONITORING

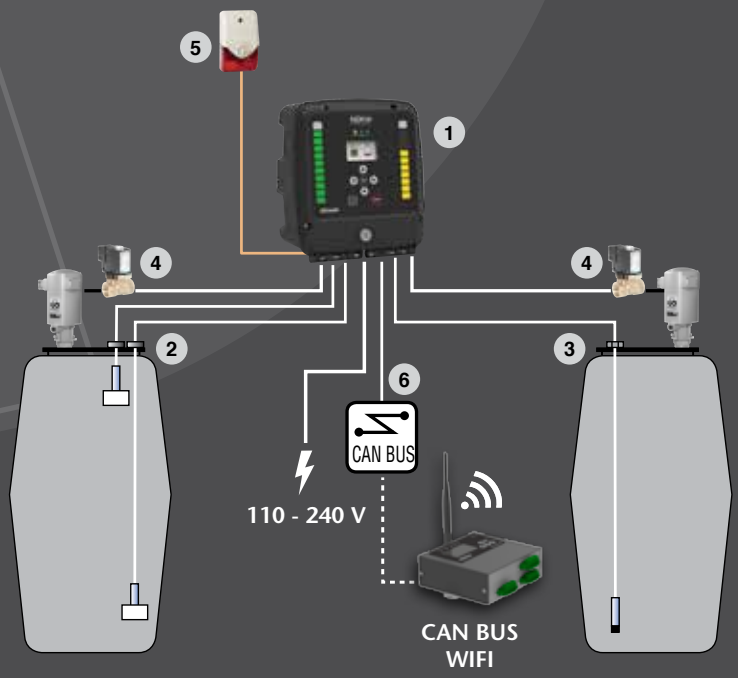

U·tank 1 can monitor up to two tanks. Each tank can be fitted with low and high level sensors 2 or with a pressure gauge 3 for real-time control of the inventory in the tank. U·tank 1 can also control pump operation opening or closing an air solenoid valve 4 that prevents pump from running dry or air entering the oil distribution lines if there is no oil in the tanks.

U·tank 1 can also control a remote flash light or siren 5 to warn when any tank is empty. U·tank 1 can communicate with other NEX·U·® elements using Wi-Fi® or through CAN BUS 6 wired connection.

Product specifications are subject to change without prior notice.





Product specifications are subject to change without prior notice.





Product specifications are subject to change without prior notice.

SAMOA
LEADING THROUGH INNOVATION

SAMOA INDUSTRIAL, S.A. - HEADQUARTERS
SPAIN AND EXPORT MARKETS
POL. IND. PORCEYO, I-14 - CAMINO DEL FONTÁN, 831
E-33392 GIJÓN (ASTURIAS), SPAIN
TEL.: +34 985 381 488 - FAX: + 34 985 147 213
export@samoaindustrial.com - www.samoaindustrial.com

SAMOA LTD.
UNITED KINGDOM AND REP. OF IRELAND
ASTURIAS HOUSE - BARRS FOLD ROAD
WINGATES INDUSTRIAL PARK
WESTHOUGHTON, BL5 3XP, UK
TEL.: +44 1942 850600 - FAX: +44 1942 812160
sales@samoa.ltd.uk - www.samoa.ltd.uk

SAMOA S.A.R.L.
FRANCE
P.A.E.I. DU GIESSEN
3, RUE DE BRISCHBACH
67750 SCHERWILLER, FRANCE
TEL.: +33 3 88 82 79 62 - FAX: +33 3 88 82 77 88
samoafrance@samoafrance.com - www.samoafrance.com

SAMOA-HALLBAUER GMBH
GERMANY AND AUSTRIA
INDUSTRIESTRASSE, 18
D-68519 VIERNHEIM, GERMANY
TEL.: +49 6204 7095-0 - FAX: +49 6204 7095-33
info@samoa-hallbauer.de - www.samoa-hallbauer.de

SAMSON CORPORATION
NORTH AMERICA
ONE SAMSON WAY
SWANNANOA, NC 28778, USA
TEL.: +1 828 686 8511 - FAX: +1 828 686 8533
info@samsoncorporation.com - www.samsoncorporation.com

SAMOA CHINA SALES OFFICE
ROOM 702, RONG GUANG BUSINESS CENTER
572 KUN MING ROAD, SHANGHAI 200082, P.R. CHINA
TEL.: +86 21 3319 0210 - FAX: +86 21 5102 7883
china@samoaindustrial.com

©Copyright, SAMOA INDUSTRIAL, S.A.

SAMOA INDUSTRIAL, S.A. IS AN ISO 9001, ISO 14001
AND ISO 45001 CERTIFIED COMPANY.

990975 • R-09/21 • 1.000 u. • Cover: Creator Silk 300 g/m² Interior: Creator Silk 170 g/m²