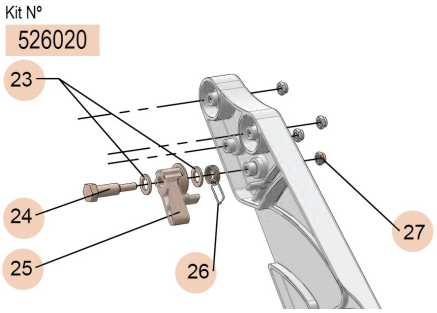

Ref.: 526020

RATCHET ASSEMBLY KIT, 526020 CODE

Spare part: RATCHET ASSEMBLY KIT, 526020 CODE

Technical data | **Documentation** | **More information**

Target product	506101: SINGLE ARM ALUMINIUM HOSE REEL, RM-12S SERIES, 10 M, 3/8", AIR / WATER / COOLANT
Target product	506121: SINGLE ARM ALUMINIUM HOSE REEL, RM-12S SERIES, 15 M, 3/8", AIR / WATER / COOLANT
Target product	506122: SINGLE ARM ALUMINIUM HOSE REEL, RM-12S SERIES, 15 M, 1/2", AIR / WATER / COOLANT
Target product	506762: SINGLE ARM ALUMINIUM HOSE REEL, RM-12S SERIES, 10 M, 1/2", WINDSCREEN WASHER / ADBLUE-DEF / DETERGENT
Target product	506782: SINGLE ARM ALUMINIUM HOSE REEL, RM-12S SERIES, 15 M, 1/2", WINDSCREEN WASHER / ADBLUE-DEF / DETERGENT
Target product	506503: SINGLE ARM ALUMINIUM HOSE REEL, RM-12S SERIES, 6 M, 5/8", WASTE OIL SUCTION
Target product	506202: SINGLE ARM ALUMINIUM HOSE REEL, RM-12S SERIES, 10 M, 1/2", LUBRICANT OIL
Target product	506222: SINGLE ARM ALUMINIUM HOSE REEL, RM-12S SERIES, 15 M, 1/2", LUBRICANT OIL
Target product	506212: SINGLE ARM ALUMINIUM HOSE REEL, RM-12S SERIES, 15+3 M, 1/2",

	LUBRICANT OIL
Target product	506300: SINGLE ARM ALUMINIUM HOSE REEL, RM-12S SERIES, 10 M, 1/4", GREASE / HYDRAULIC OIL
Target product	506301: SINGLE ARM ALUMINIUM HOSE REEL, RM-12S SERIES, 10 M, 3/8", GREASE / HYDRAULIC OIL
Target product	506311: SINGLE ARM ALUMINIUM HOSE REEL, RM-12S SERIES, 15+3 M, 3/8", GREASE / HYDRAULIC OIL
Target product	506321: SINGLE ARM ALUMINIUM HOSE REEL, RM-12S SERIES, 15 M, 3/8", GREASE / HYDRAULIC OIL
Target product	506421: SINGLE ARM ALUMINIUM HOSE REEL, RM-12S SERIES, 15 M, 3/8", HIGH PRESSURE HOT WATER (UP TO 100 °C)

Catalogs

Spare part document: LUBRICATION SPARE PARTS GENERAL CATALOGUE 2024 (PDF)

Download