STANDARD AXLE STAND AB8-580

STRONG, STABLE AXLE STAND FOR MOST TYPES OF VEHICLES, INCLUDING CARS, TRUCKS, BUSES, ETC.

Item number: 5100350

- Suitable to everything from cars to trucks and agricultural machinery
- Height adjustable
- High quality with maximum stability and long life



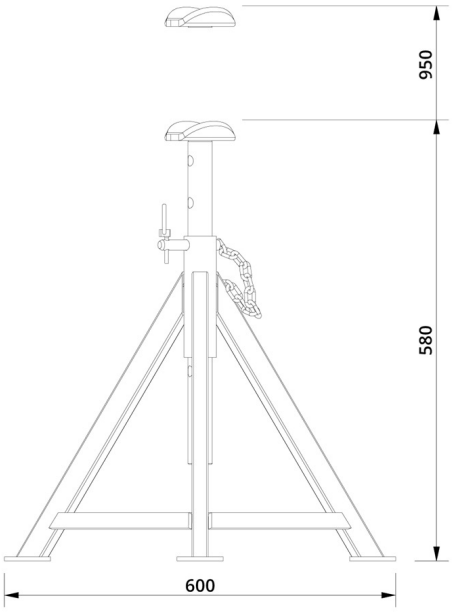

Capacity:	8 t
Min height:	580 mm
Max height:	950 mm
Width:	600 mm
Positions:	6